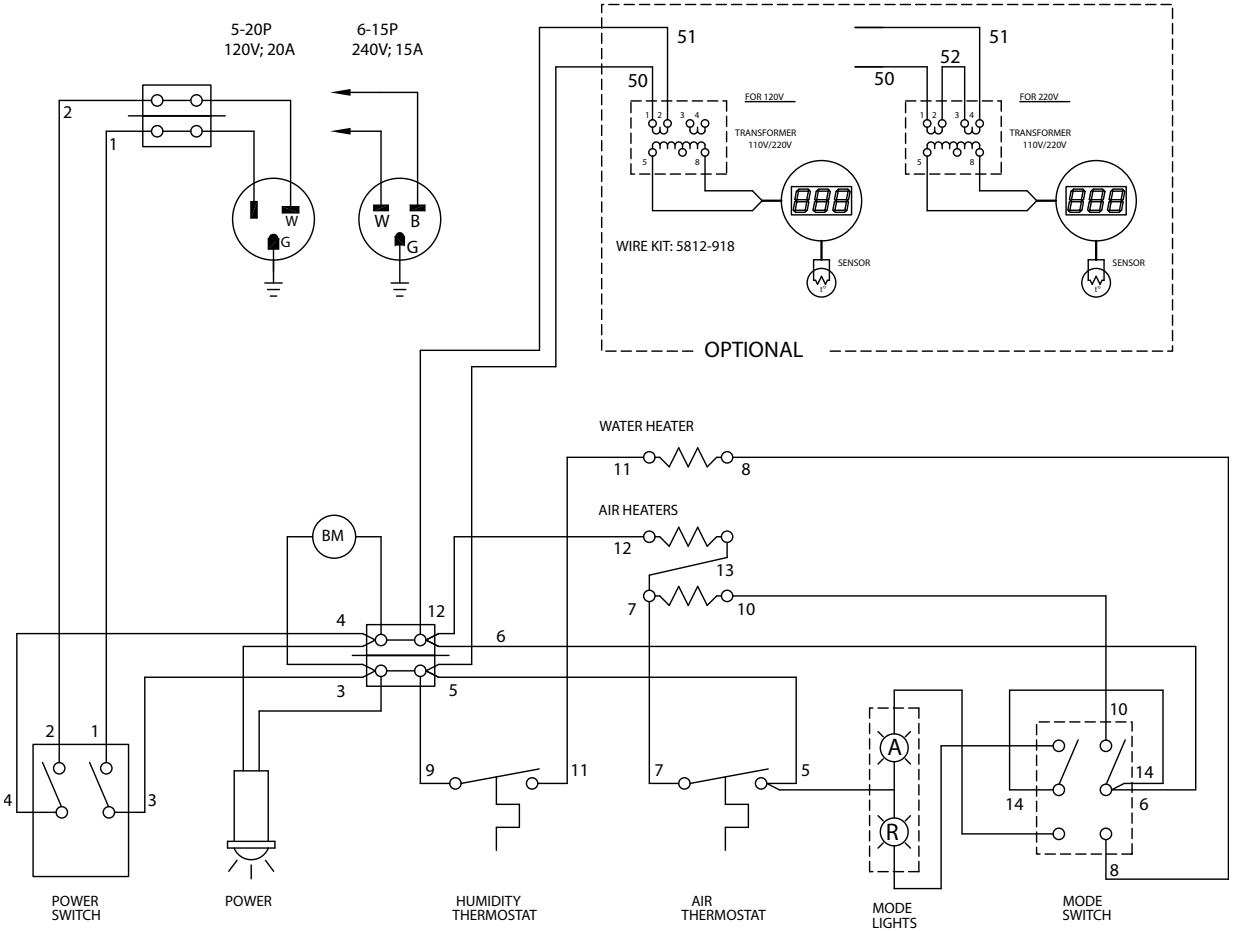
5-20P
120V; 20A
6-15P
240V; 15A
2
1
W
G
W
B
G
51
50
FOR 120V
TRANSFORMER
110V/220V
WIRE KIT: 5812-918
SENSOR
51
52
50
FOR 220V
TRANSFORMER
110V/220V
SENSOR
OPTIONAL
WATER HEATER
11
8
AIR HEATERS
12
13
7
10
BM
4
12
6
3
5
2
1
4
3
9
11
7
5
A
R
10
14
14
6
8
POWER
SWITCH
POWER
HUMIDITY
THERMOSTAT
AIR
THERMOSTAT
MODE
LIGHTS
MODE
SWITCH